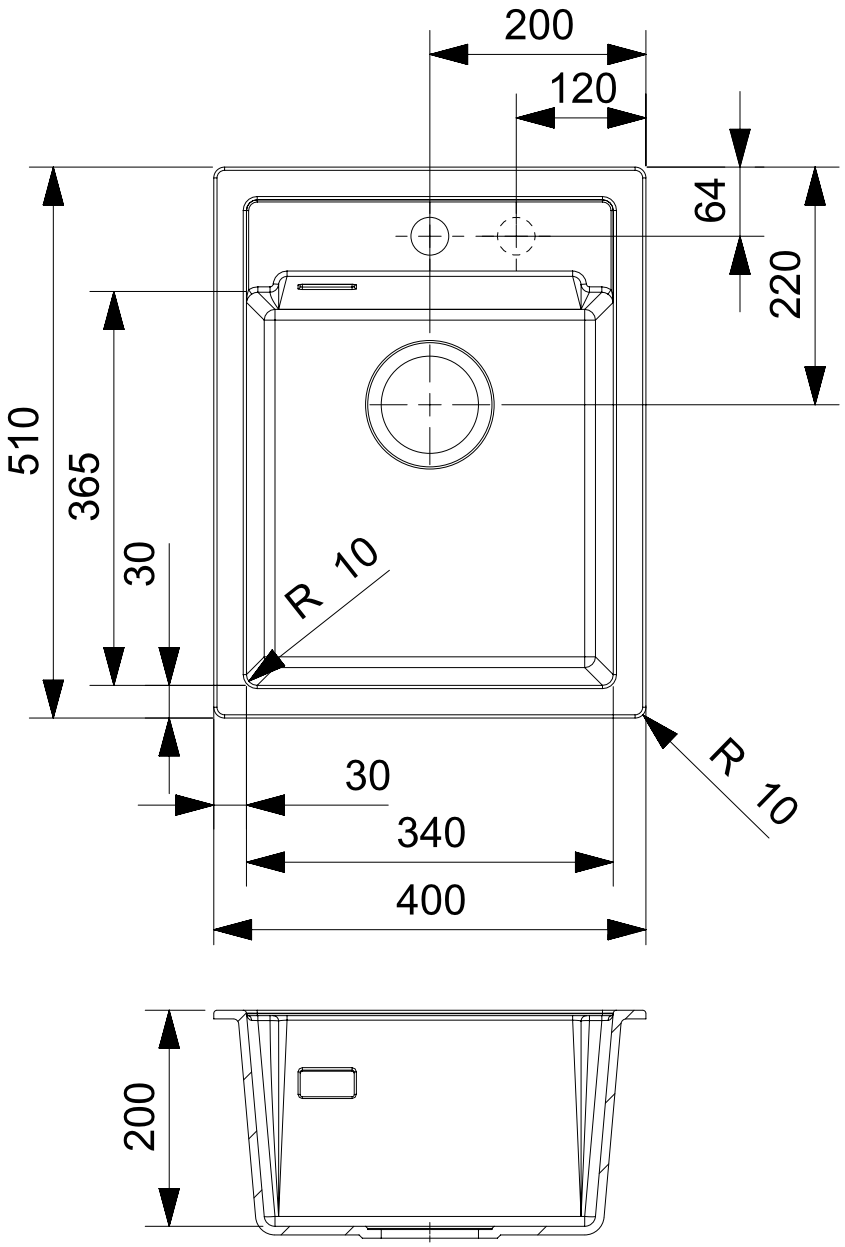

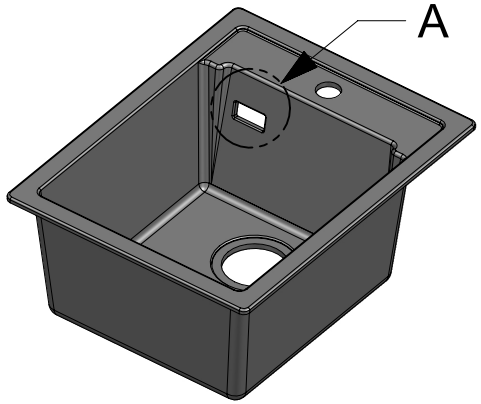

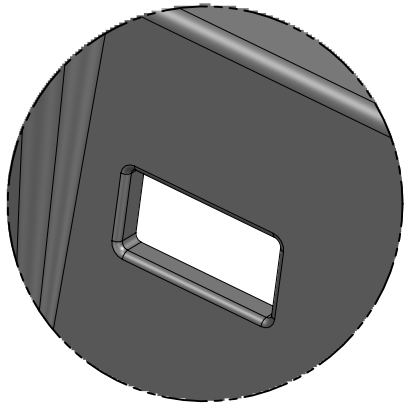

DETAIL A

Amsterdam 34 Grey Silvery

Date: 3-11-2022

Tolerantie buitenmaat per zijde: ±0.5mm
Toleranz Aussenmasse pro Seite: ±0.5mm
Per side the outside tolerance measure: ±0.5mm